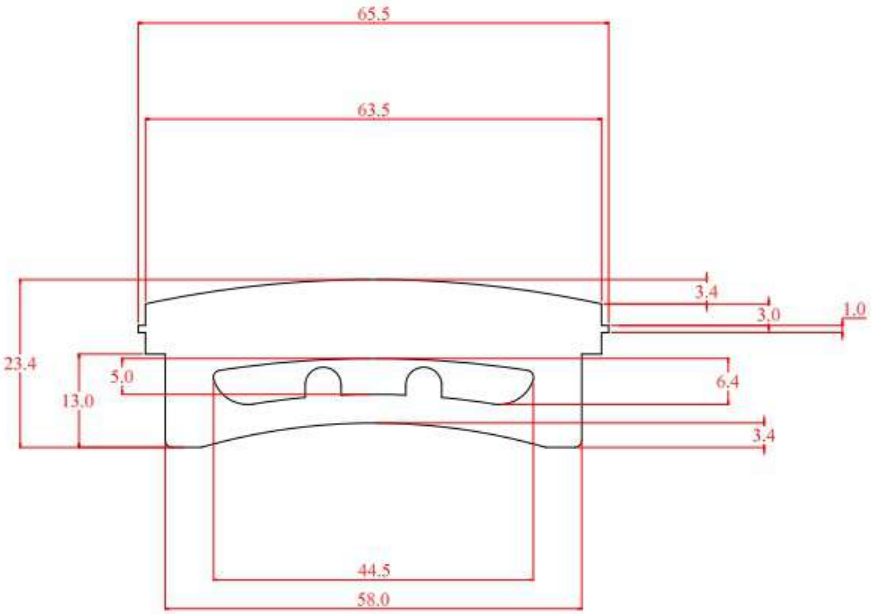

				DRAWN	MATL SİLİKON KAUÇUK		SİBOPLU CONTA
				DATE	SPEC -		Beykent Sanayi Sitesi Sakarya Sokak No : 141 Büyükçekmece / İstanbul / Türkiye www.sibopluconta.com
				APP. ENG -	FORM -		GEN ASSY -
				APP. PE -	FINISH		TITLE -
ISSUE	DATE	DRAWN	APPROVED	APP. QA -	SCALE 1:1		DRG. NO. SC 6643